# Woodpeckers®

# STAIR TREAD TEMPLATE TOOL

## O W N E R ' S  M A N U A L

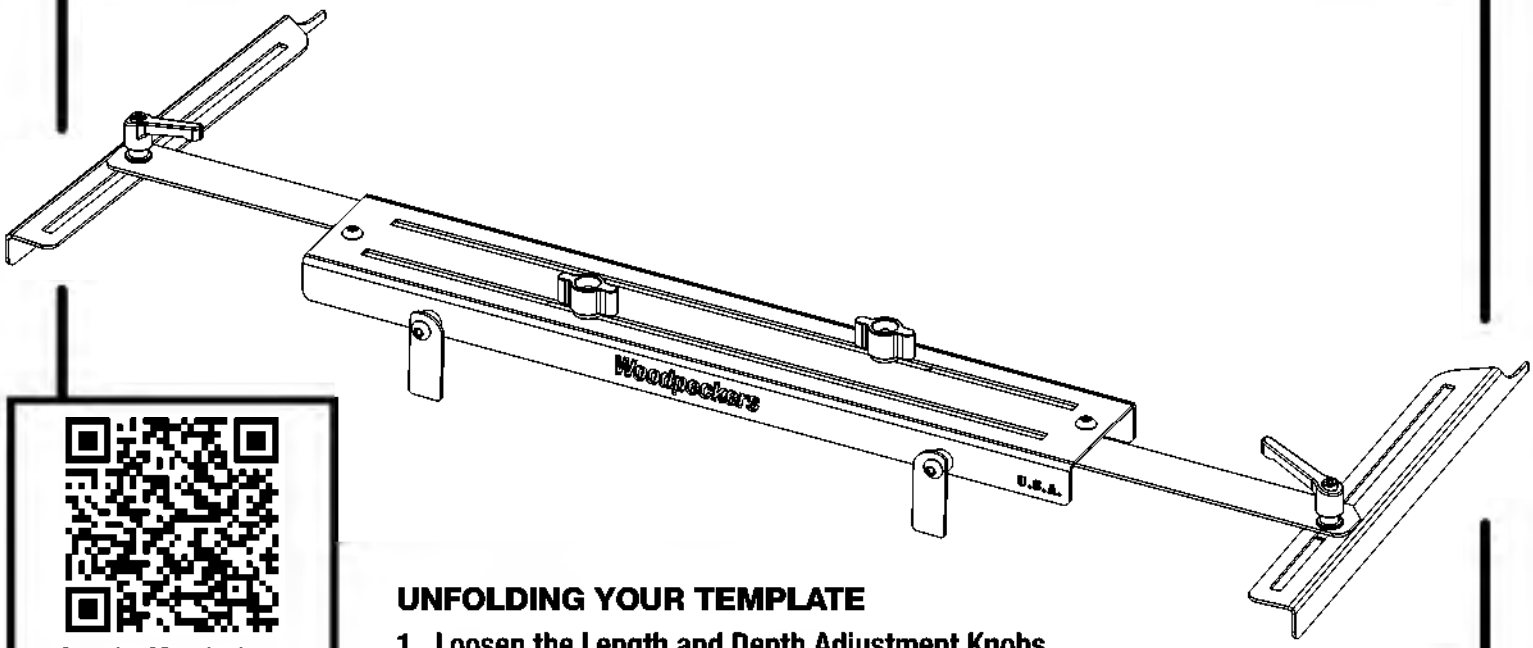


Scan the QR code above to watch the video or visit woodpeck.com under the video tab towards the bottom of the product page.

### UNFOLDING YOUR TEMPLATE

1. **Loosen the Length and Depth Adjustment Knobs.**
2. **Extend the Length Arms and unfold the Angle Arms.**
3. **Adjust the arms so that the tool will fit in the enclosure being mesaured.**

**NOTE** **The ratcheting Angle Adjustment Knob may be lifted up and spun to eliminate interference with the side wall.**

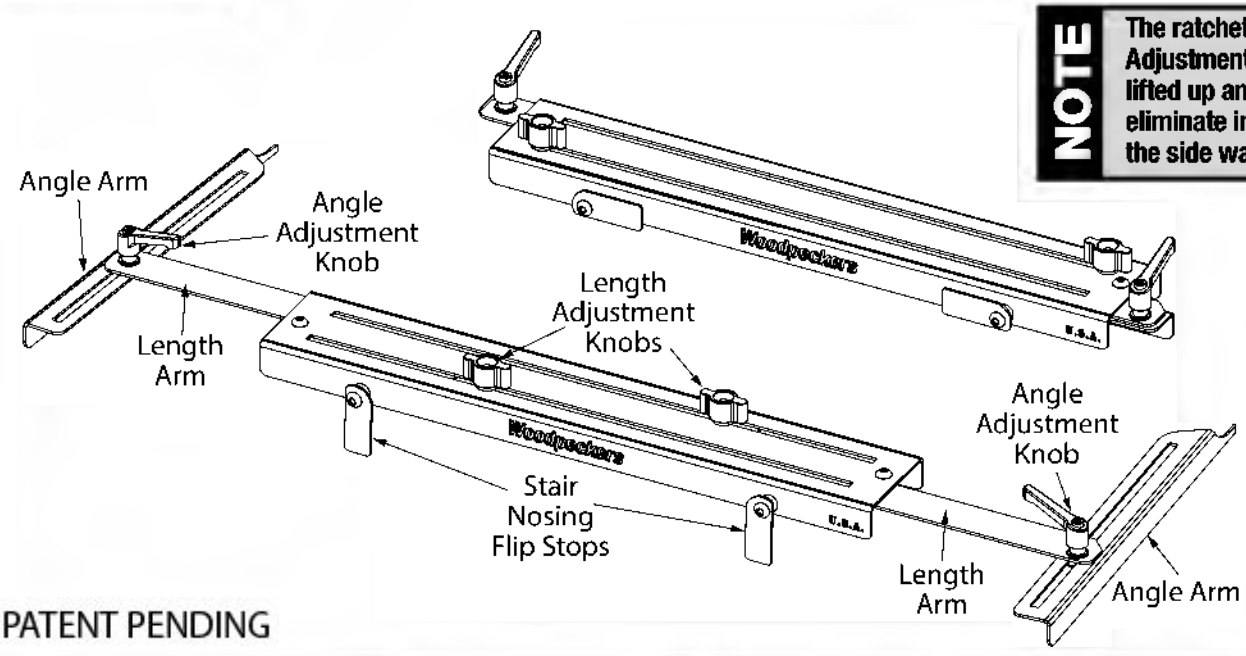


PATENT PENDING

**If you think you're missing anything, email us at mailroom@woodpeck.com.**
**Or, check the webpage for the most current version of this manual.**
**You can also call us at 800-752-0725 from 9:00 a.m. to 4:00 p.m. EST Monday - Friday.**

Woodpeckers Stair Tread Template Tool creates an instant template for dimension and angle of stair treads or any other surface that is captured on three sides.

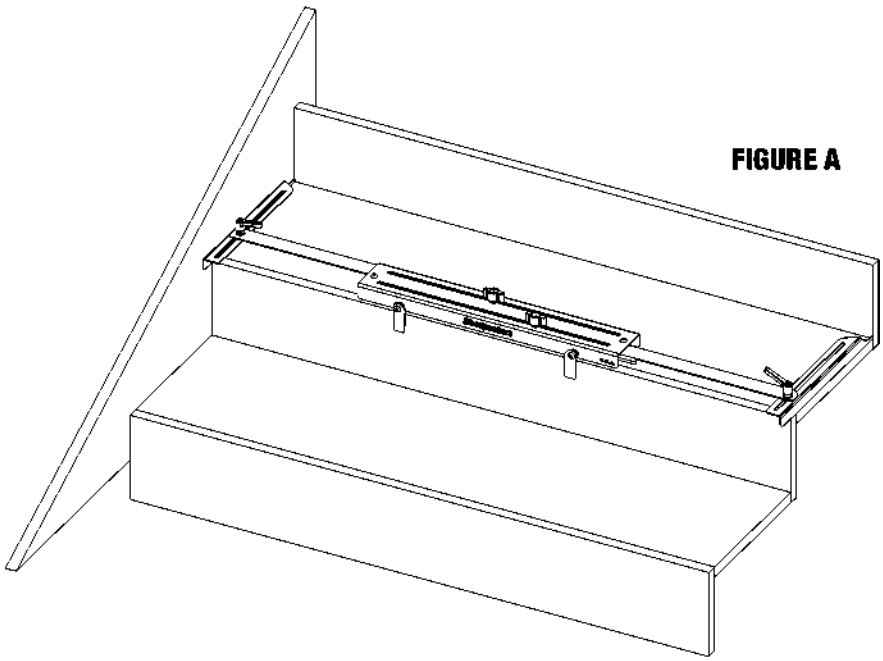

FIGURE A

## CREATING AN INSTANT TEMPLATE

1. Flip the Stair Nosing Flip Stops down and loosen the Angle and Length Adjustment Knobs.
2. Align the flip stops with the nosing side of your stair tread enclosure. Adjust one set of arms to one of the side walls. Tighten both Adjustment Knobs on that side finger tight. **FIGURE A.**
3. Extend the other set of arms until the Angle Arm matches the profile of the other side wall. Tighten both Adjustment Knobs finger tight.
4. Press one Angle Arm into the side wall while using the ratcheting Angle Adjustment Knob to tighten the template.
5. Confirm both Pivoting Ends are flush to their walls and firmly tighten the Length Adjustment Knobs.
6. Lift your Stair Tread template out carefully (tipping one end up on an angle is usually required).

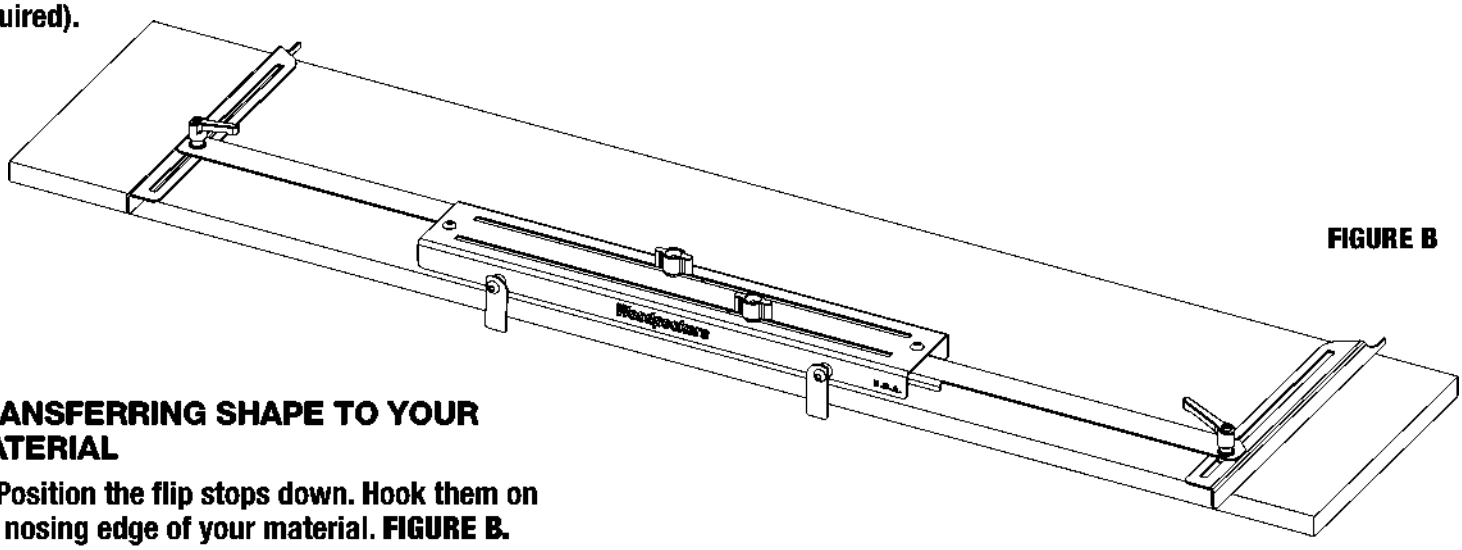

FIGURE B

## TRANSFERRING SHAPE TO YOUR MATERIAL

1. Position the flip stops down. Hook them on the nosing edge of your material. **FIGURE B.**
2. Mark dimension and angle by scribing lines along the two Angle Arms.

Woodpeckers®
Woodpeckers, LLC
Strongsville, Ohio
woodpeck.com
© 2025 Woodpeckers, LLC

woodpeck.com — At Woodpeckers we are constantly reviewing & improving our tools. The most current version of our instruction manuals are always available to download at woodpeck.com. (Located in the bottom section of the tool's page under the "Additional Information" or "Instructions" tabs.)

eCLUB — Be the first to know all the new products, OneTIME Tools & sales by subscribing to our eClub. (Located at the top center of our webpage woodpeck.com.)

YouTube — Subscribe to our YouTube channel to stay up-to-date on all the latest tool tips & tricks.

INTERACT WITH US! Follow us on Facebook, Instagram & TikTok!

KnotHole — Enjoy shop tips, project ideas, tool techniques & more in our Woodworking Resource Center/Blog. (Located at the bottom center of our webpage woodpeck.com.)

**WARNING!**
This product can expose you to chemicals, including chromium, which is known to the State of California to cause cancer and birth defects or other reproductive harm. For more information go to www.P65Warnings.ca.gov

REV052026